DIMNS MARKED DENOTES (S) SAFETY/REGULATION (F) CRITICAL FIT/FUNCTION (M) MAJOR FIT/FUNCTION (M2) MINOR FIT/FUNCTION

FINISH GRINDING ∅	PLATING THICKNESS (BEFORE POST CHROME GRINDING)	PLATING THICKNESS (AFTER POST (F) CHROME GRINDING)	∅'C'
∅10.938~10.948	18±4μm	15±4μm	∅10.960~10.986

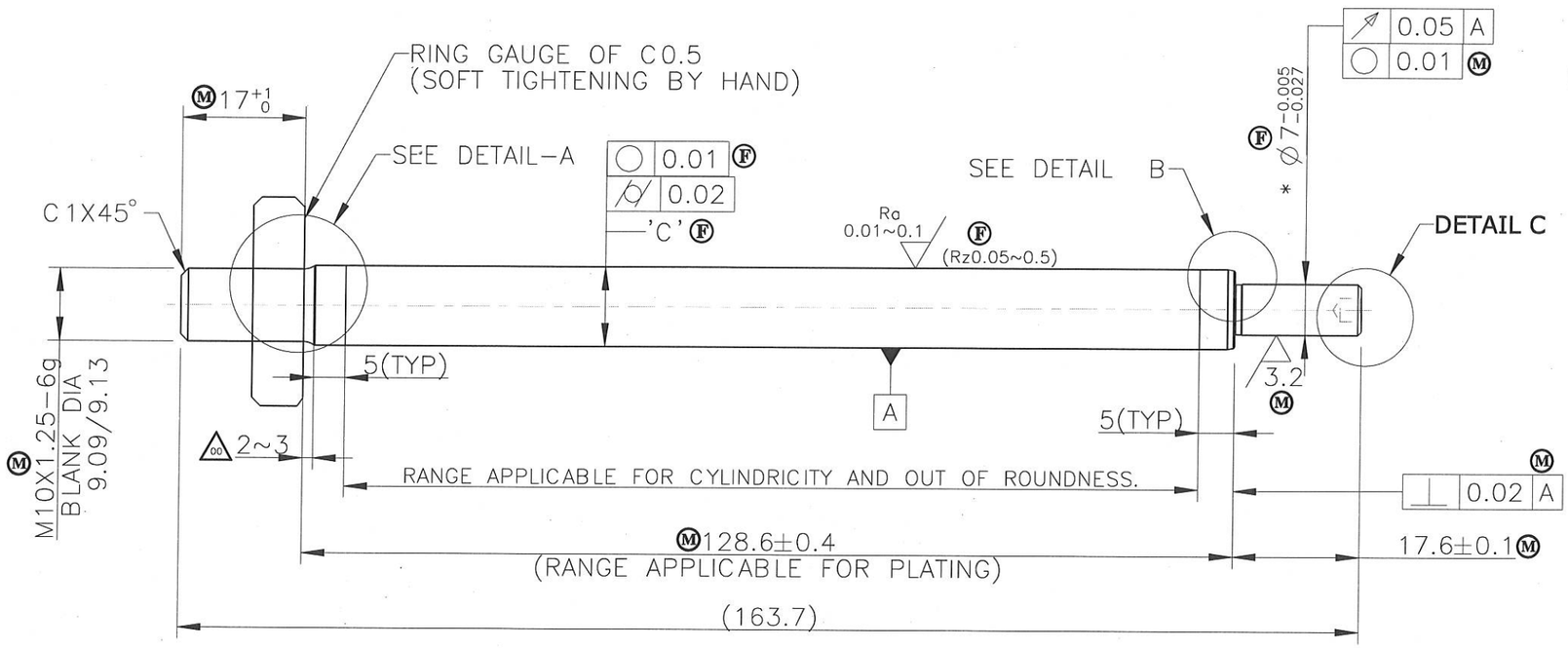

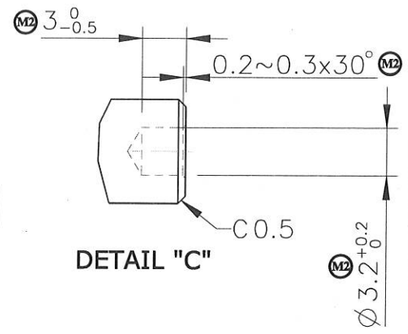

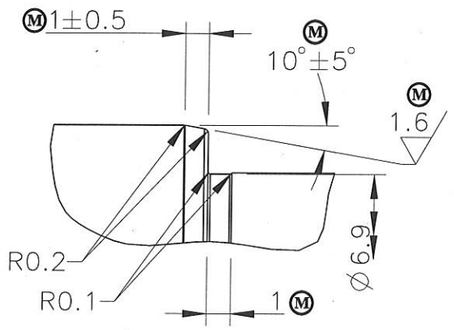

DETAIL "B"

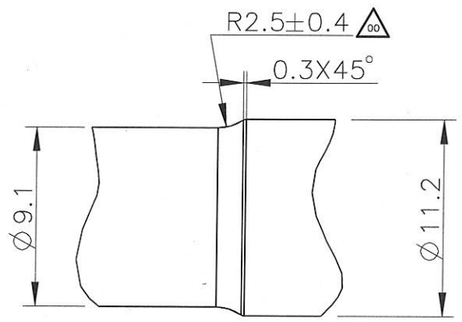

(PROFILE AT MACHINING STAGE)

DETAIL "A"

MASTER COPY ONLY IF RED

NOTES:

1. TO BE GROUND TO FINISH SIZE AFTER PLATING MATERIAL REMOVAL 3~5μ ON DIAMETER.
(M) 2. MUST BE NO CHATTER, SCRATCH, ABRASION AND BRUSIE ON SURFACE OF ∅11.
(M) 3. MUST BE NO PIN HOLE, ROUGH SURFACE AND BLISTER AFTER PLATING.
(M) 4. CHROME HARDNESS : HV 800MIN. / 50gms LOAD.
5. PARTING PIP NOT PERMITTED.
(F) 6a. CORROSION RESISTANCE : UP TO 48 Hrs CASS TEST. RATING NO. 7 MIN.
6b. PLATING VALIDATION : CORROSION RESISTANCE AS MENTIONED OHTER PARAMETERS AS PER GSP 0103.
7. '*' MARKED DIMENSION SHOULD BE CHECKED WITH GO AND NOGO RING GAUGE.

DATE	REV	ALTERATION	E.C.N.NO
17.10.18	00	MASS PRODUCTION RELEASED, DIM. 2~3 WAS 2, R2.5±0.4 WAS 2.5.	080-02
18.09.18	A3	RELEASED FOR PRE PRODUCTION	080-01
11.07.18	A2	OTS RELEASED, PART NO. 34040195 WAS 34040315-T, ○ & ⊥ ADDED	D28/18
11.05.18	A1	RELEASED FOR PROTO	---

SUPERSEDES :

GENERAL TOLERANCE ASPER : -

DESIGN SOURCE REF.

RELEASE FOR: ☐ COSTING ☐ PROTOTYPE ☐ OTS ☐ PRE-PRODUCTION ■ PRODUCTION

GABRIEL INDIA LTD.

SCALE	SHEETS	FINISH:	MASS:
1:1	1 / 1	HARD CHROME PLATING	111 g

DRAWN BY MADHU — DATE: 17.10.18

CHECKED BY VRISHALI — DATE: 17.10.18

APPROVED BY DIWAKAR BHAT — DATE: 17.10.18

NAME:- PISTON ROD

MATERIAL:- BAR-3404010 (S) AS PER GP136-5

PART NO:- 34040195 — REV. 00

ALL DIMENSIONS ARE IN MM. | NO MANUAL ALTERATION | DO NOT SCALE | IF IN DOUBT PLEASE ASK | SIZE : A3

U229 RR

CONFIDENTIAL: THIS DRAWING AND THE INFORMATION THEREIN ARE THE PROPERTY OF GABRIEL INDIA LTD., AND SHALL NOT BE REPRODUCED, COPIED RECORDED IN ANY MEDIA, USED FOR ANY OTHER PURPOSE OR DELIVERED AND/OR DISCLOSED TO ANY THIRD PARTY WITHOUT WRITTEN CONSENT OF GABRIEL.